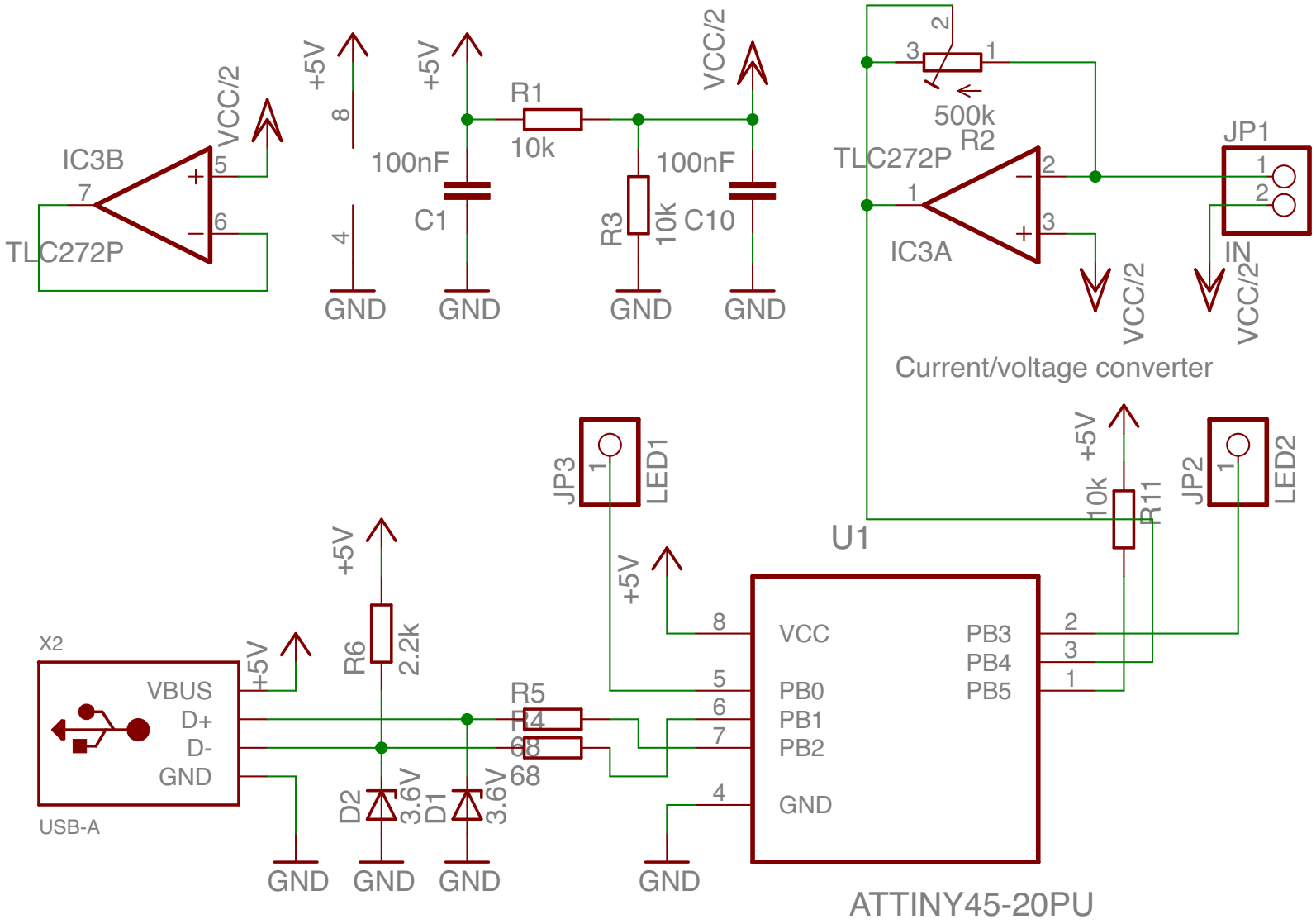
IC3B
TLC272P
VCC/2
+5V
GND
100nF
C1
R1
10k
R3
10k
C10
TLC272P
IC3A
500k
R2
JP1
IN
Current/voltage converter
JP3
LED1
JP2
LED2
R11
10k
U1
ATTINY45-20PU
VCC
PB0
PB1
PB2
GND
PB3
PB4
PB5
X2
VBUS
D+
D-
GND
USB-A
R6
2.2k
R5
68
D2
3.6V
D1
3.6V