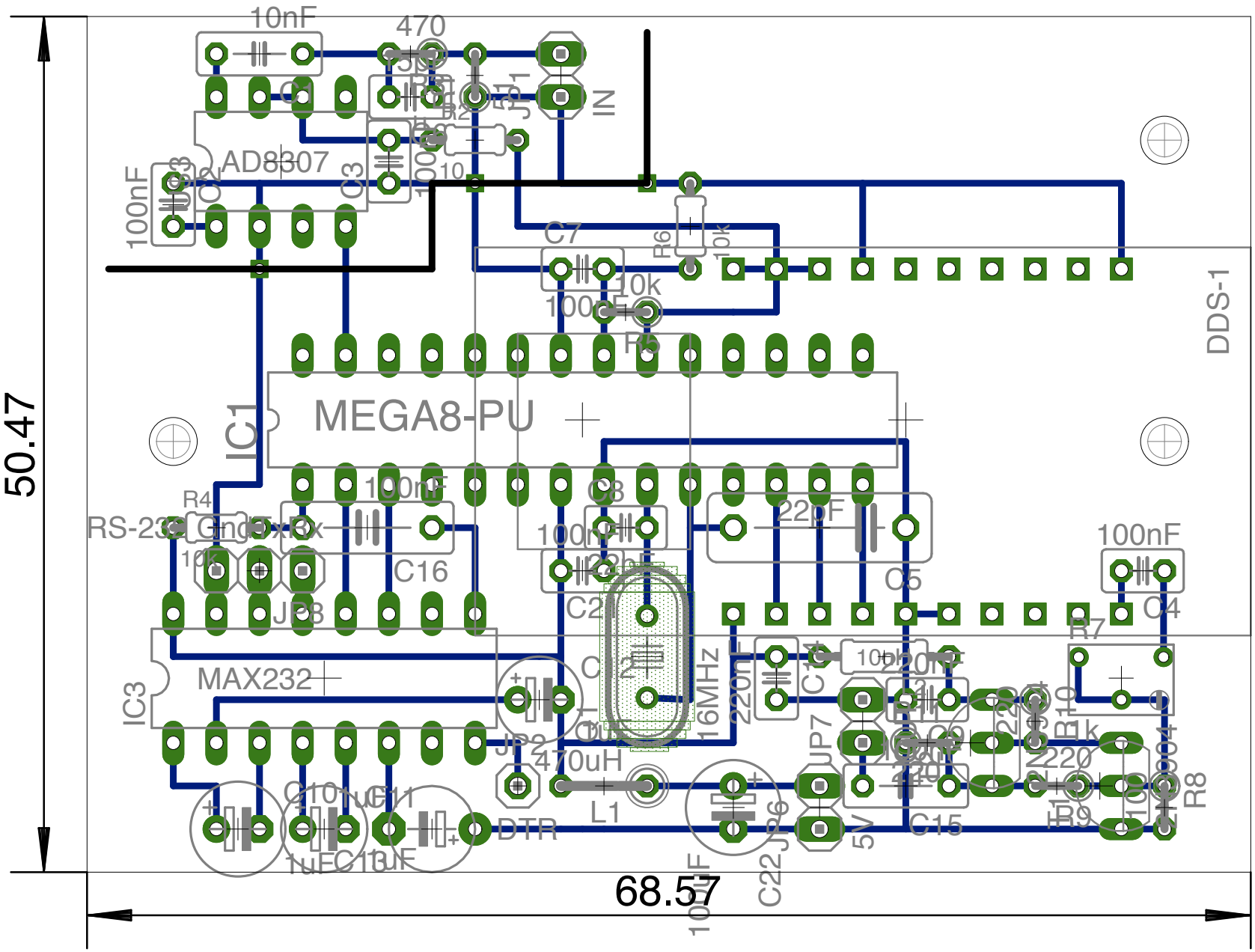
50.47
68.57
10nF
470
AD8307
100nF
C7
10k
R6
R5
IN
DDS-1
MEGA8-PU
IC1
R4
RS-232
Gnd
Tx
Rx
C16
C8
C5
C4
R7
MAX232
IC3
JP3
JP2
470uH
L1
16MHz
DTR
C10
C11
C13
C22
C15
R8
R9
5V