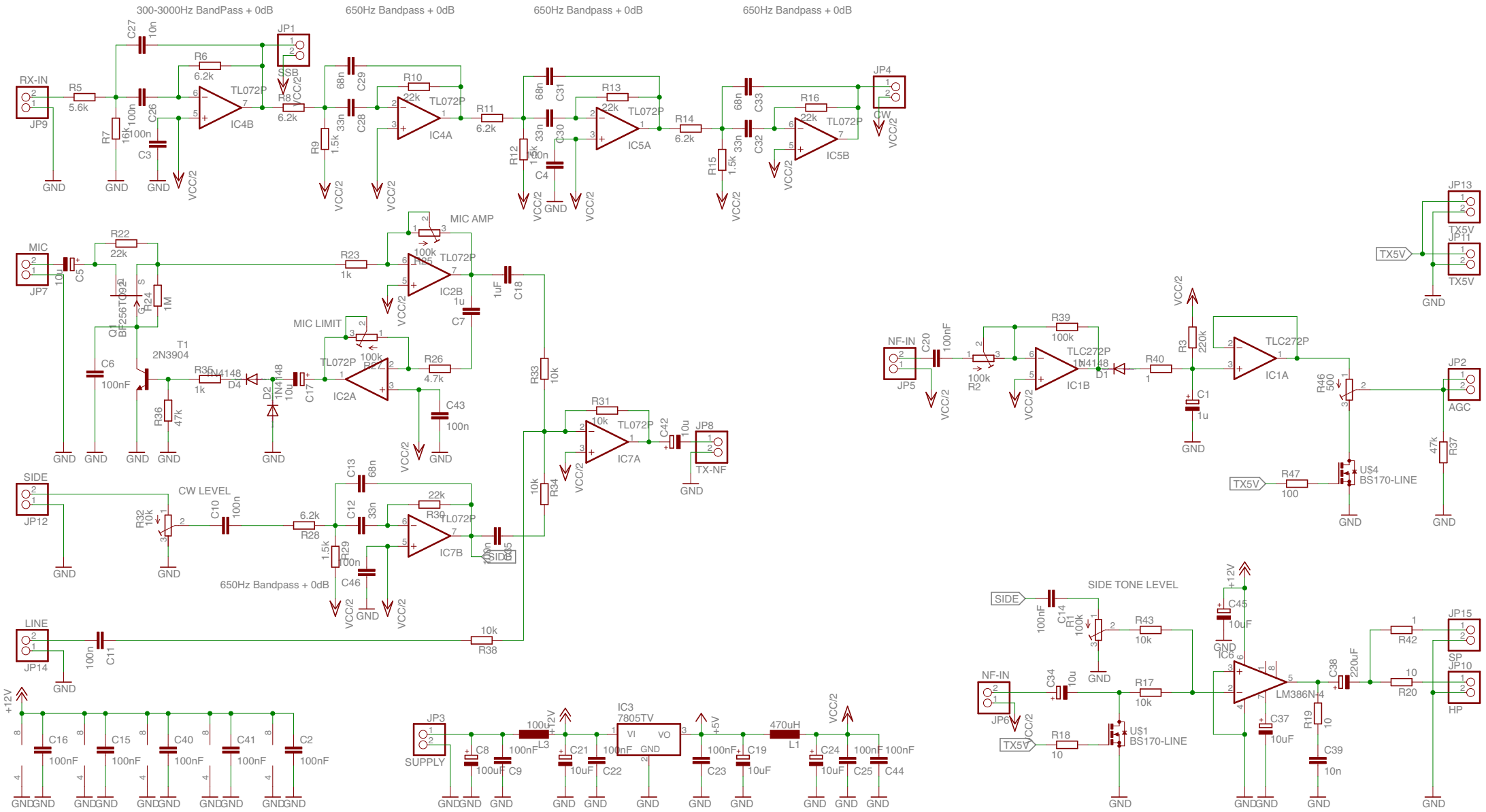
300-3000Hz BandPass + 0dB
650Hz Bandpass + 0dB
650Hz Bandpass + 0dB
650Hz Bandpass + 0dB
RX-IN
JP9
R5 5.6k
C27 10n
R6 6.2k
R7 16k
C26 100n
C3 100n
IC4B TL072P
JP1 SSB
R8 6.2k
C29 68n
C28 33n
R9 1.5k
R10 22k
IC4A TL072P
R11 6.2k
C31 68n
C30 33n
R12 16k
C4 100n
R13 22k
IC5A TL072P
R14 6.2k
C33 68n
C32 33n
R15 1.5k
R16 22k
IC5B TL072P
JP4 CW
VCC/2
GND
MIC
JP7
C5 10u
R22 22k
Q1 BF256TO92
R24 1M
C6 100nF
T1 2N3904
R35 1k
R36 47k
D4 1N4148
D2 1N4148
C17 10u
R23 1k
R25 100k
MIC AMP
IC2B TL072P
C7 1u
C18 1uF
MIC LIMIT
R27 100k
IC2A TL072P
R26 4.7k
C43 100n
R33 10k
R31 10k
IC7A TL072P
C42 10u
JP8 TX-NF
SIDE
JP12
CW LEVEL
R32 10k
C10 100n
R28 6.2k
C13 68n
C12 33n
R29 1.5k
C46 100n
R30 22k
IC7B TL072P
C35 100n
SIDE
R34 10k
650Hz Bandpass + 0dB
LINE
JP14
C11 100n
R38 10k
+12V
C16 100nF
C15 100nF
C40 100nF
C41 100nF
C2 100nF
JP3
SUPPLY
C8 100uF
C9 100nF
L3 100u
C21 10uF
C22 100nF
IC3 7805TV
VI VO GND
C23 100nF
C19 10uF
+5V
L1 470uH
C24 10uF
C25 100nF
C44 100nF
NF-IN
JP5
C20 100nF
R2 100k
R39 100k
TLC272P
1N4148 D1
IC1B
R40 1
R3 220k
C1 1u
IC1A TLC272P
R46 500
R47 100
U$4 BS170-LINE
TX5V
JP13
JP11
JP2 AGC
R37 47k
SIDE
SIDE TONE LEVEL
C14 100nF
R1 100k
R43 10k
C45 10uF
IC6 LM386N-4
NF-IN
JP6
C34 10u
R17 10k
R18 10
U$1 BS170-LINE
C37 10uF
R19 10
C39 10n
C38 220uF
R42 1
R20 10
JP15 SP
JP10 HP