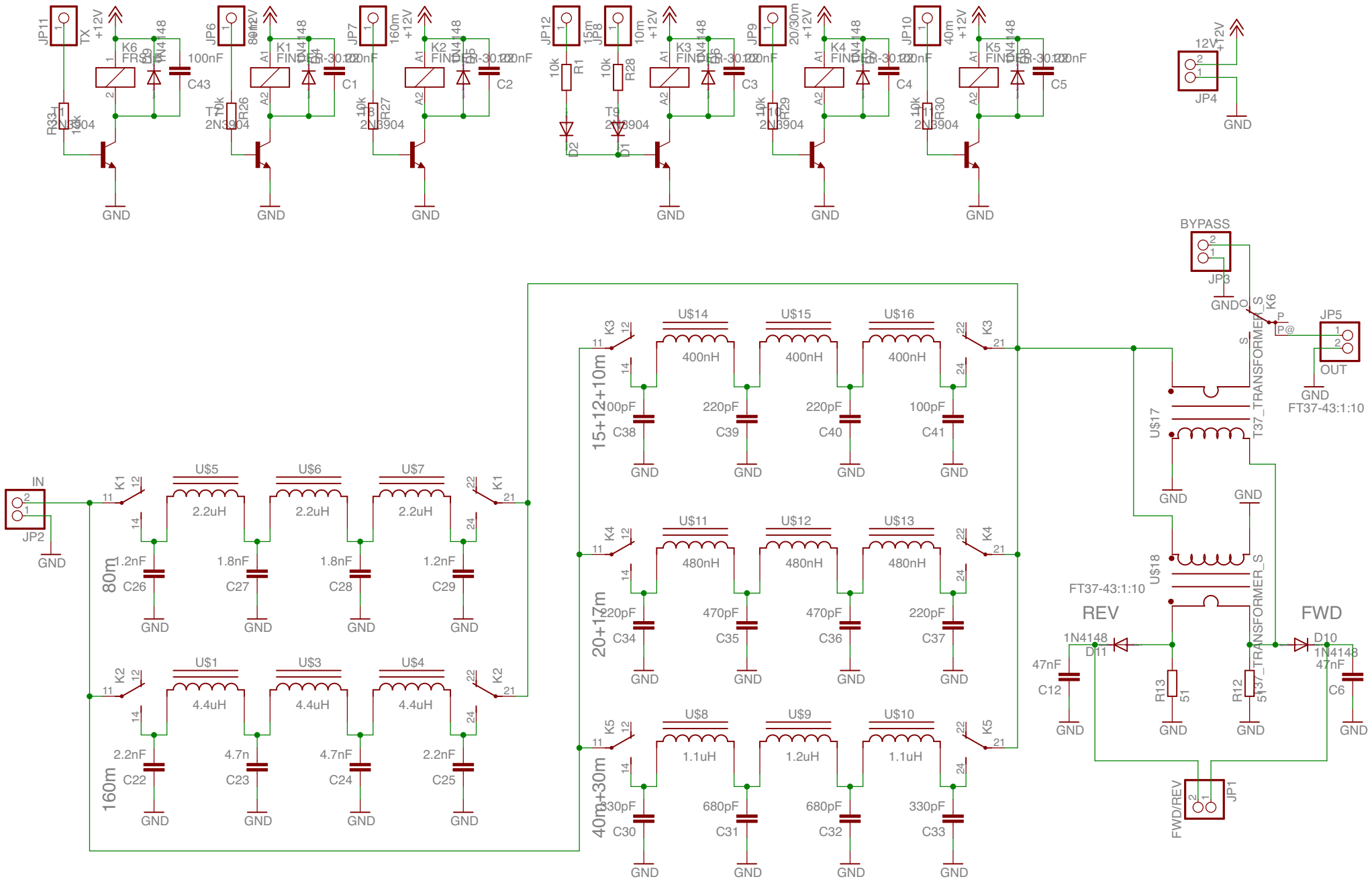
JP11
TX
+12V
K6
FRG-30
1N4148
100nF
C43
R33
10k
T7
2N3904
GND
JP6
80m
+12V
K1
FINDER-30.22
1N4148
C1
R26
T8
2N3904
JP7
160m
+12V
K2
FINDER-30.22
1N4148
C2
R27
T6
2N3904
JP12
15m
R1
10k
D2
JP8
10m
+12V
R28
10k
T9
2N3904
D1
K3
FINDER-30.22
1N4148
C3
R29
T11
2N3904
JP9
20/30m
+12V
K4
FINDER-30.22
1N4148
C4
R30
T10
2N3904
JP10
40m
+12V
K5
FINDER-30.22
1N4148
C5
12V
+12V
JP4
BYPASS
JP3
K6
P
P@
JP5
OUT
FT37-43:1:10
T37_TRANSFORMER_S
U$17
U$18
FT37-43:1:10
REV
FWD
1N4148
D11
D10
47nF
C12
R13
51
R12
C6
FWD/REV
JP1
IN
JP2
K1
U$5
U$6
U$7
2.2uH
1.2nF
C26
1.8nF
C27
1.8nF
C28
1.2nF
C29
80m
K2
U$1
U$3
U$4
4.4uH
2.2nF
C22
4.7n
C23
4.7nF
C24
2.2nF
C25
160m
K3
U$14
U$15
U$16
400nH
100pF
C38
220pF
C39
220pF
C40
100pF
C41
15+12+10m
K4
U$11
U$12
U$13
480nH
220pF
C34
470pF
C35
470pF
C36
220pF
C37
20+17m
K5
U$8
U$9
U$10
1.1uH
1.2uH
1.1uH
330pF
C30
680pF
C31
680pF
C32
330pF
C33
40m+30m