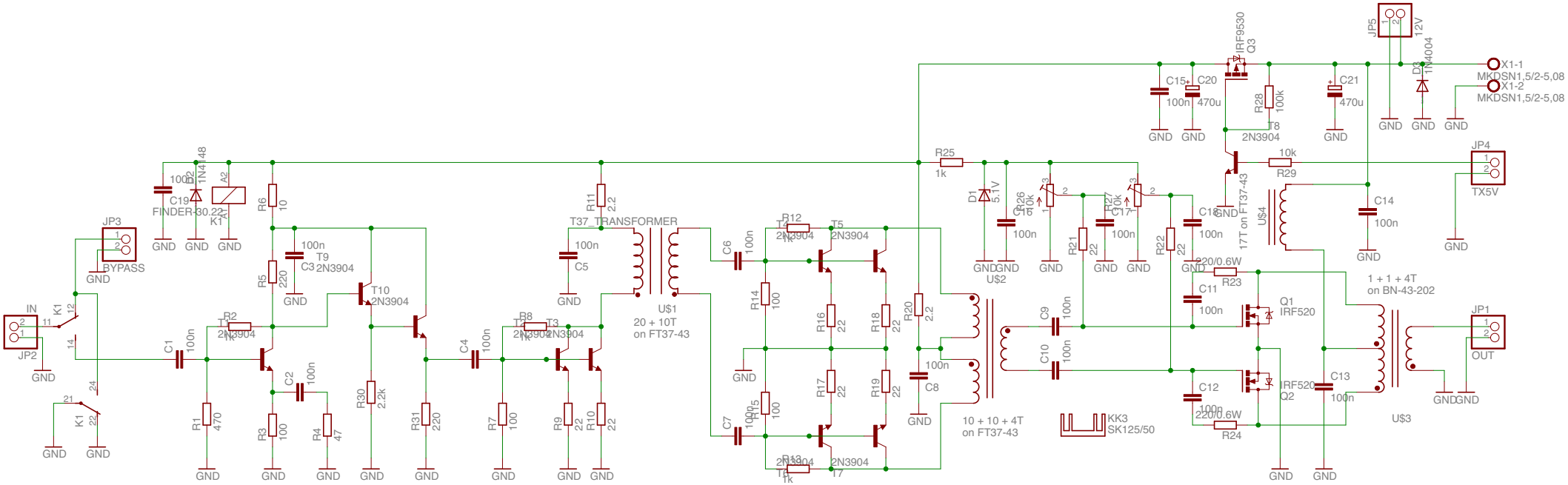
IN
JP2
JP3
BYPASS
K1
FINDER-30.22
D2
1N4148
C19
100n
A1
A2
R6
10
R5
220
C3
100n
T9
2N3904
T10
2N3904
R2
1k
T1
2N3904
C1
100n
C2
100n
R1
470
R3
100
R4
47
R30
2.2k
R31
220
GND
T37_TRANSFORMER
U$1
20 + 10T
on FT37-43
R11
2.2
C5
100n
C4
100n
R8
1k
T2
2N3904
T3
2N3904
R7
100
R9
22
R10
22
C6
100n
C7
100n
R12
1k
T4
2N3904
T5
2N3904
R13
1k
T6
2N3904
T7
2N3904
R14
100
R15
100
R16
22
R17
22
R18
22
R19
22
R20
2.2
C8
100n
10 + 10 + 4T
on FT37-43
R25
1k
D1
5.1V
C16
100n
R26
10k
R27
10k
C17
100n
R21
22
R22
22
U$2
C9
100n
C10
100n
KK3
SK125/50
C15
100n
C20
470u
IRF9530
Q3
R28
100k
T8
2N3904
C21
470u
C18
100n
17T on FT37-43
U$4
R29
10k
R23
220/0.6W
C11
100n
Q1
IRF520
C12
100n
220/0.6W
R24
IRF520
Q2
C13
100n
C14
100n
1 + 1 + 4T
on BN-43-202
U$3
JP5
12V
D3
1N4004
X1-1
MKDSN1,5/2-5,08
X1-2
MKDSN1,5/2-5,08
JP4
TX5V
JP1
OUT