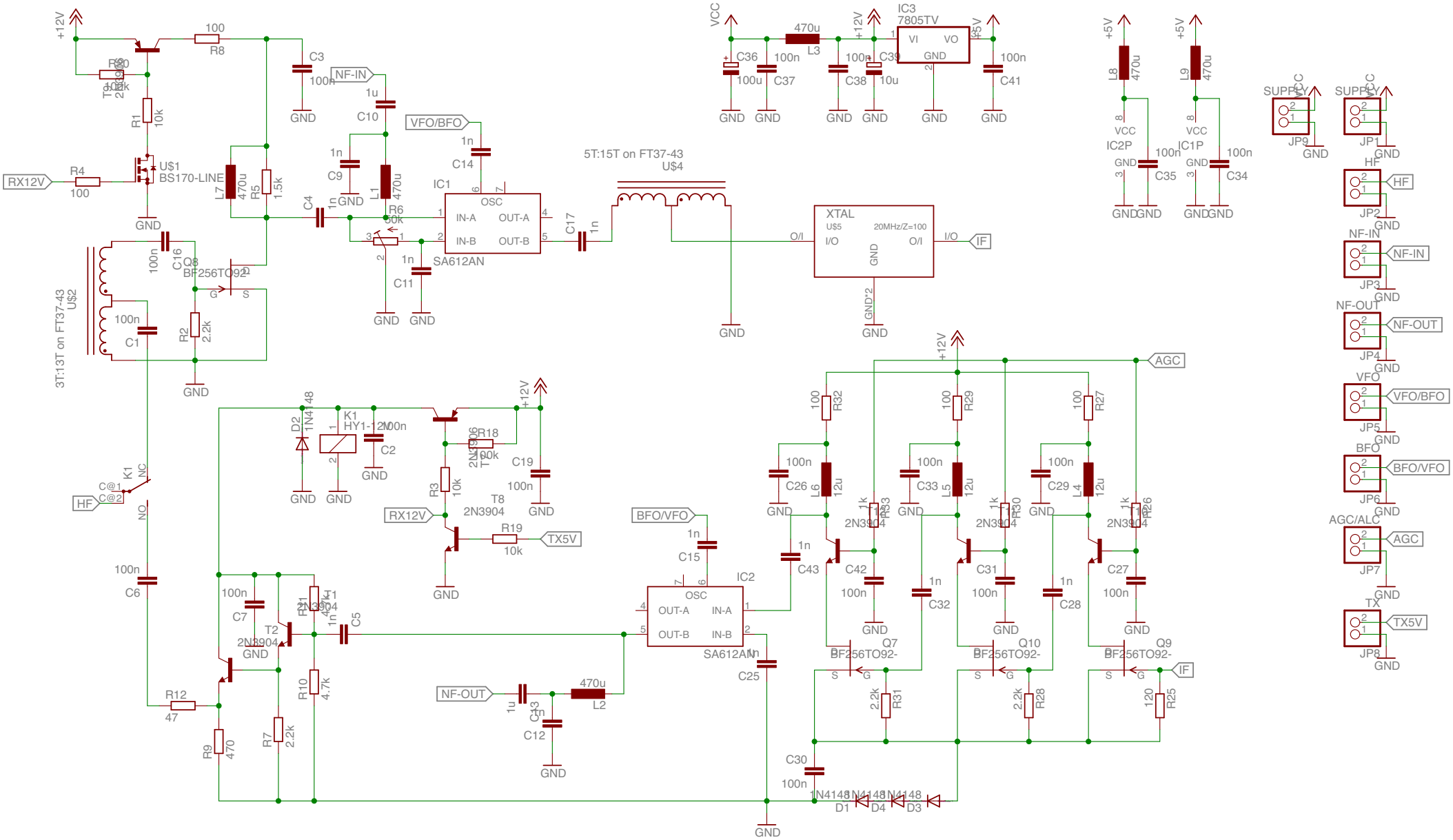

+12V
R8
100
R1
10k
RX12V
R4
100
U$1
BS170-LINE
GND
C3
100n
NF-IN
1u
C10
VFO/BFO
1n
C14
C9
L1
470u
L7
R5
1.5k
C4
R6
50k
IC1
OSC
IN-A
OUT-A
IN-B
OUT-B
SA612AN
C11
C17
5T:15T on FT37-43
U$4
XTAL
U$5
20MHz/Z=100
I/O
O/I
GND
GND*2
IF
VCC
C36
100u
C37
L3
C38
C39
10u
IC3
7805TV
VI
VO
C41
+5V
L8
L9
IC2P
IC1P
C35
C34
SUPPLY
JP9
JP1
HF
JP2
NF-IN
JP3
NF-OUT
JP4
VFO
VFO/BFO
JP5
BFO
BFO/VFO
JP6
AGC/ALC
AGC
JP7
TX
TX5V
JP8
C16
Q8
BF256TO92
R2
2.2k
C1
3T:13T on FT37-43
U$2
D2
1N4148
K1
HY1-12V
C2
R18
2N3906
T8
2N3904
R3
10k
R19
10k
TX5V
C19
C6
C7
T2
2N3904
T1
2N3904
C5
R10
4.7k
R12
47
R9
470
R7
2.2k
BFO/VFO
C15
IC2
OSC
OUT-A
IN-A
OUT-B
IN-B
SA612AN
C25
NF-OUT
C13
C12
L2
R32
R29
R27
AGC
C26
C33
C29
L6
L5
L4
12u
R33
R30
R26
C43
C42
C31
C27
C32
C28
Q7
Q10
Q9
BF256TO92-
R31
R28
R25
120
C30
1N4148
D1
D4
D3