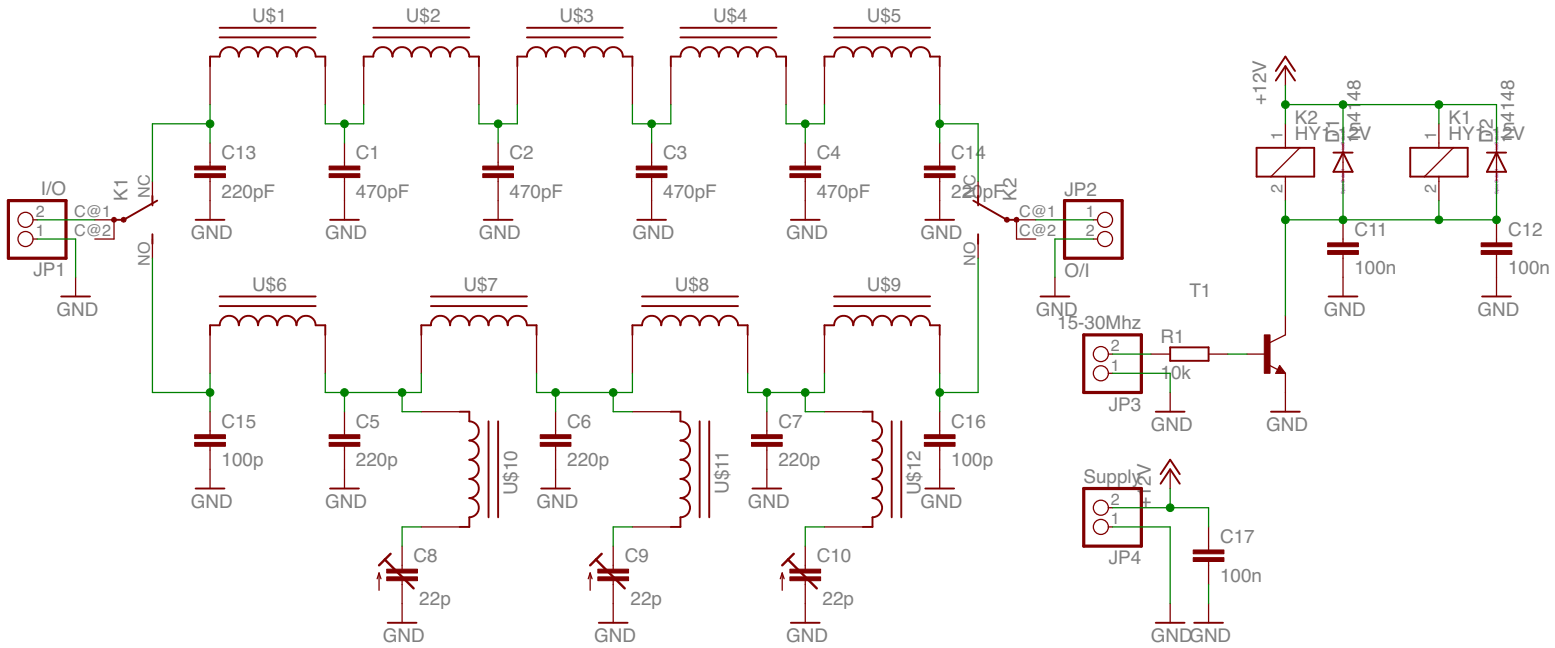
U$1
U$2
U$3
U$4
U$5
U$6
U$7
U$8
U$9
U$10
U$11
U$12
C13
220pF
C1
470pF
C2
470pF
C3
470pF
C4
470pF
C14
220pF
C15
100p
C5
220p
C6
220p
C7
220p
C16
100p
C8
22p
C9
22p
C10
22p
I/O
JP1
K1
NC
NO
C@1
C@2
GND
JP2
O/I
K2
+12V
HY1
D1
1N4148
D2
1N4148
C11
100n
C12
100n
T1
15-30Mhz
JP3
R1
10k
Supply
JP4
C17
100n