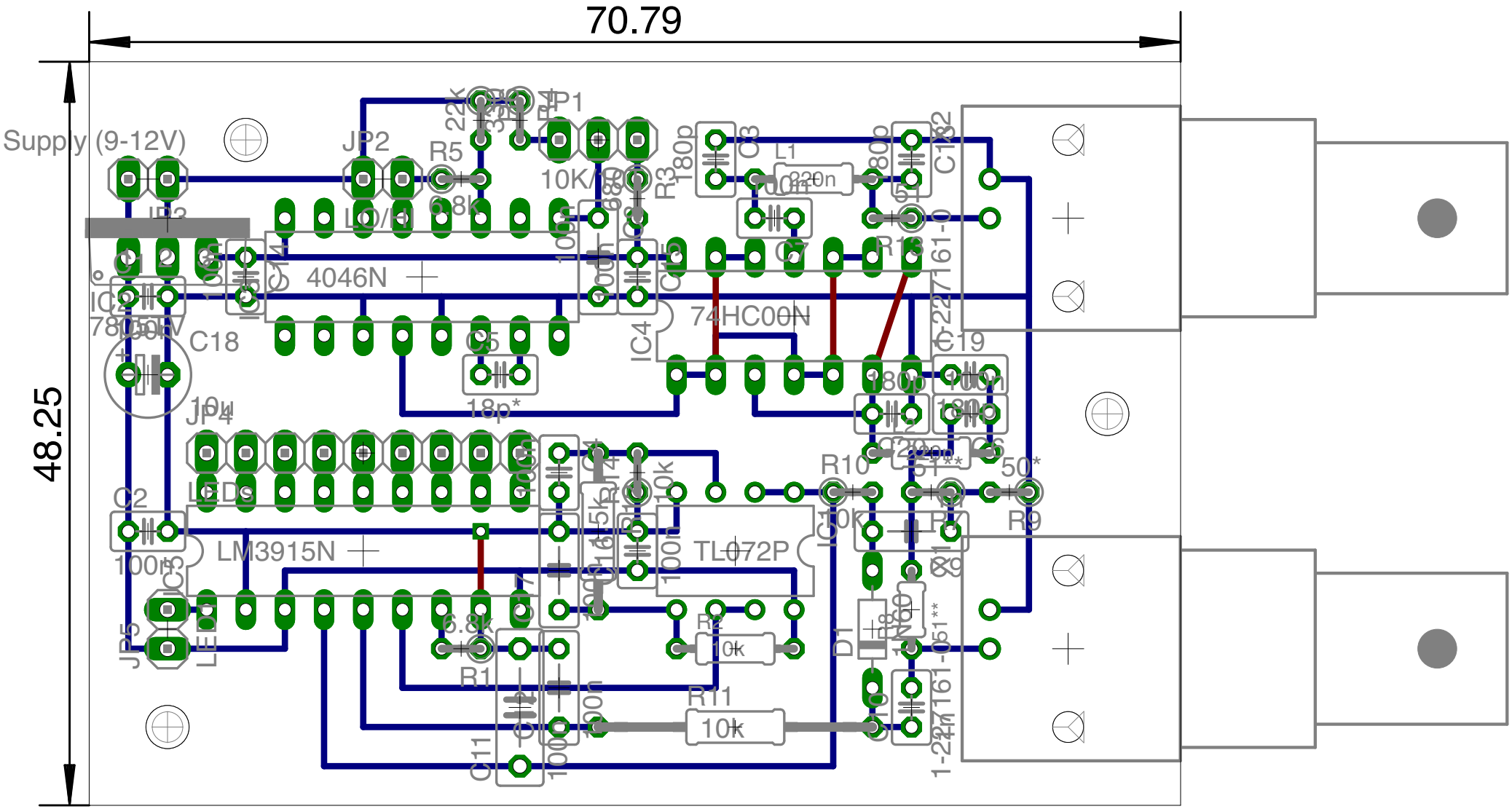
70.79
48.25
Supply (9-12V)
JP2
JP1
R5
10K/10
68k
LO/HI
4046N
IC2
78L05
C18
10u
C5
18p*
IC4
74HC00N
C19
JP4
LEDs
C2
100n
LM3915N
TL072P
R10
10k
50*
R9
JP5
LED
6.8k
R1
R2
10k
R11
10k
D1
1N60
C11
100n
L1
220n
C13
C12
R13
C7
C6
C16
C17
C10
C14
C15
R3
180p
C8
C9
C1
IC3
IC1
IC5
R12
R7
R8
C20
C21
C22
C23
C24
C25
C26
C27
C28
C29
C30
C31
C32
C33
C34
C35
C36
C37
C38
C39
C40
C41
C42
C43
C44
C45
C46
C47
C48
C49
C50
C51
C52
C53
C54
C55
C56
C57
C58
C59