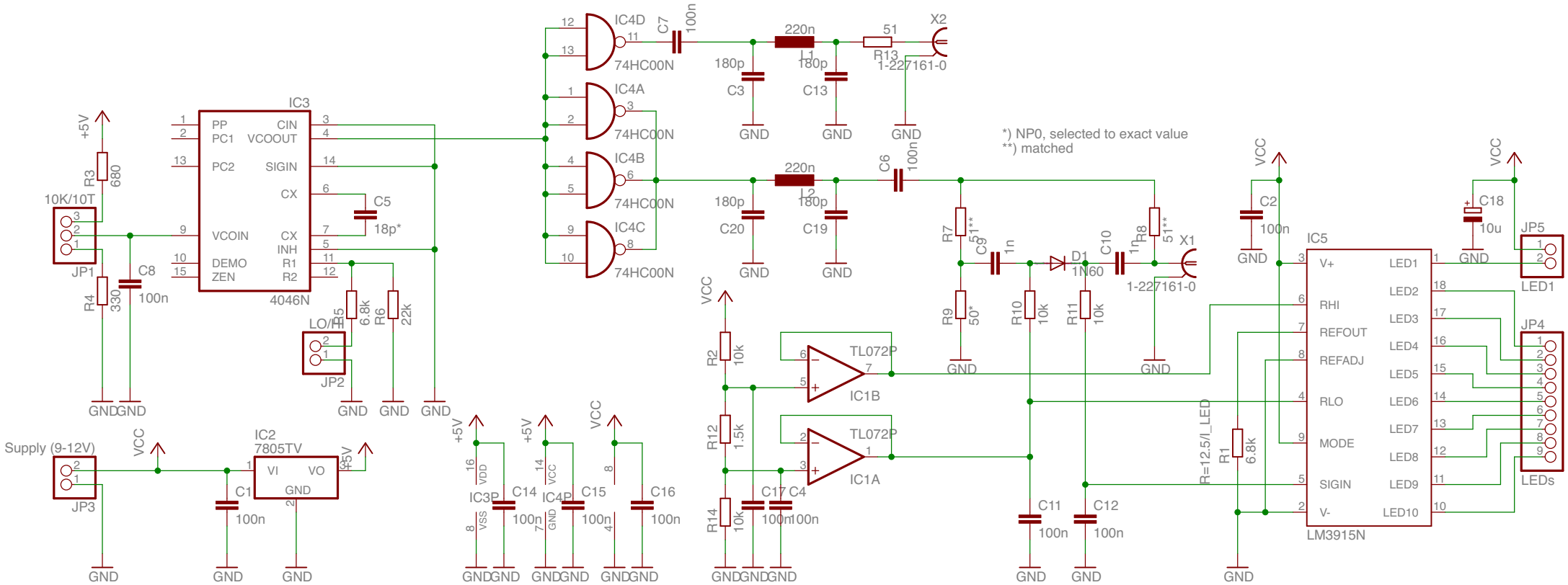
IC3
4046N
PP
PC1
PC2
VCOIN
DEMO
ZEN
CIN
VCOOUT
SIGIN
CX
CX
INH
R1
R2
IC4D
IC4A
IC4B
IC4C
74HC00N
C7 100n
C6 100n
220n
L1
L2
180p
C3
C13
C20
C19
51
R13
1-227161-0
X2
X1
*) NP0, selected to exact value
**) matched
R7 51**
R8 51**
R9 50*
C9 1n
C10 1n
D1 1N60
R10 10k
R11 10k
C11 100n
C12 100n
C5 18p*
R5 6.8k
R6 22k
LO/HI
JP2
JP1
10K/10T
R3 680
R4 330
C8 100n
+5V
GND
VCC
Supply (9-12V)
JP3
IC2
7805TV
VI
VO
GND
C1 100n
IC3P
IC4P
C14 100n
C15 100n
C16 100n
TL072P
IC1B
IC1A
R2 10k
R12 1.5k
R14 10k
C17 100n
C4 100n
IC5
LM3915N
V+
RHI
REFOUT
REFADJ
RLO
MODE
SIGIN
V-
LED1
LED2
LED3
LED4
LED5
LED6
LED7
LED8
LED9
LED10
C2 100n
R1 6.8k
R=12.5/I_LED
C18 10u
JP5
LED1
JP4
LEDs